SCHROEDAHL®

SCHROEDAHL

Pump protection valves | Control valves

HIGH TECHNOLOGY AT ITS BEST

High-Quality valves for industrial applications and energy production.

› Aerial view of the company premises in Reichshof

SCHROEDAHL is one of the leading international suppliers of high-quality special valves for industrial and process plants as well as for nuclear and fossil power plants.

With our know-how and decades of experience we provide reliable engineering solutions, which in each case are precisely adapted to the individual technical requirements. In doing so, we as a manufacturer of speciality valves insist on a strict quality management system from the development and planning up to the manufacturing, installation and service.

Experienced engineers individually plan, calculate and configure valve solutions for a wide range of applications enabling us to contribute to optimum processes and consequently to the success of our customers.

Through the use of special materials in combination with our CNC precision manufacturing, you can trust in the SCHROEDAHL products which protect processes in a durable and efficient way. As we archive all planning and production details relating to every SCHROEDAHL product, even decades later we can still supply you with suitable wear and spare parts.

Founded in 1962, the family business has been part of the American CIRCOR Group since 2015.

As a subsidiary of CIRCOR International Inc., SCHROEDAHL is well positioned internationally. We are ready and willing to take new paths in order to further develop our products to meet changing markets and customer requirements.

PRODUCTS AND APPLICATIONS

High quality pump protection valves and control valves made in Germany!

Upstream Oil and Gas

Midstream Oil and Gas

Downstream Oil and Gas

General Industry

Power Generation

Processing

Since 1962 we have delivered over 60,000 valves to satisfied customers all over the world.

The SCHROEDAHL automatic recirculation valve is a high-quality automatic solution to protect centrifugal pumps against overheating, instability and cavitation under no or low process volume conditions.

It is more cost effective than a conventional control valve. Special operating conditions, low load data, complex commissioning situations and pressures in the bypass line influence the valve design and are therefore usually part of the enquiry information provided by our customers. This enables us to offer high-quality solutions.

SCHROEDAHL control valves are developed to customer specifications to make control processes in power plants or industrial plants particularly effective and efficient. The spectrum reaches from small applications like biogas plants up to major projects like power plants with a capacity of 1.600 MW.

Our control valves serve many areas of application:

- Steam conversion
- Steam cooling
- Cooling water and feed water control
- Pump protection
- Level control

Special requirements demand special solutions.

THE KNOW-HOW INNOVATION BASED ON TRADITION!

In over 60 years we have gained comprehensive application know-how in the “business of flow and pressure”.

Highly sophisticated analysis tools and computer fluid dynamics simulation programs provide us with important information on the potential for optimization.

The experience-based estimation of the thermodynamic effects allows us to predict the actual behaviour of media and materials. This way, we can be sure that there will be not unforeseen surprises.

The energy market is changing faster and faster. Nature, politics and the planet’s resources are forcing us to find new solutions.

We are already a step ahead – in our flow researching and developing new advanced solutions for you and for the future of your business.

PUMP PROTECTION VALVES

The high-quality automatic solution for the protection of centrifugal pumps.

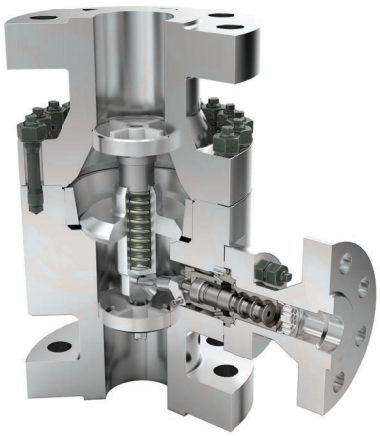

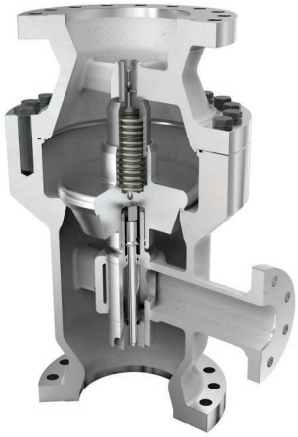

Technical data (exact data depending on valve type)

Nominal diameter	DN 25-500 / NPS 1-20
Pressure class	PN 10-640 / Class 150-4500
Temperature (max.)	Up to 230 °C / 446 °F
Housing type	Forged or cast
Media	Liquids of all kinds (water, oil, chemicals and others)
Flanges	EN 1092-1, ASME B.16.5, ISO 7005, JIS, JPI, welding ends on request
Designs	Vertical installation, Horizontal installation, Manual start-up, Optional non-return, Degassing connection, Design for particles (with wiper)
Number of stages (max.)	10
Number of controlled stages (max.)	10
Operating range (max.)	Delta p up to max. 500 bar

Features/benefits:

- Automatically modulating bypass function
- Internal operation (no external energy source required)
- Easy to install
- Low maintenance
- Suitable for all liquids
- Special material possible
- Customized

CONTROL VALVES FOR STEAM APPLICATIONS

Valves for pressure/temperature reduction and steam conditioning.

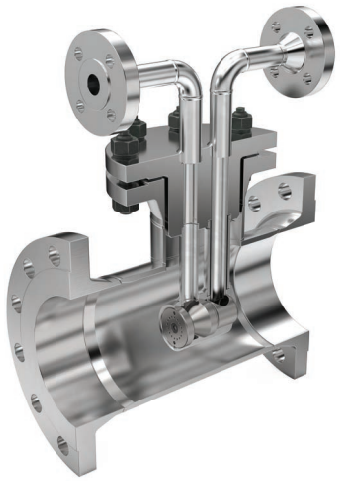

Technical data (exact data depending on valve type)

Nominal diameter	DN 25-1200 / NPS 1-48
Pressure class	PN 15-640 / Class 150-4500
Temperature (max.)	Up to 600 °C / 1200 °F
Housing type	Forged
Media	Superheated gas, stem
Flanges	EN 1092-1, ASME B.16.5, ISO 7005, JIS, JPI, welding ends on request
Designs	Angle-type, globe-type
Actuator	Pneumatic, electric, hydraulic
Number of stages (max.)	9
Number of controlled stages (max.)	6
Operating range (max.) Smalles to highest load case	1:100

Features/benefits:

- High control accuracy over the entire control range
- Suitable for difficult operating conditions, high quality temperature control and avoidance of temperature shocks (valve and piping)
- Excellent pressure atomization
- Low noise
- High operational reliability using simple components, minimal wear and tear
- Special material possible
- Customized

CONTROL VALVES FOR WATER APPLICATIONS

Our cooling water and feed water control valves represent high precision work.

Technical data (exact data depending on valve type)

Nominal diameter	DN 15-600 / NPS ½ - 24
Pressure class	PN 16-640 / Class 150-4500
Temperature (max.)	Up to 280 °C / 536 °F
Housing type	Forged
Media	Water, water mixtures, vapour, condensate
Flanges	EN 1092-1, ASME B16.5, ISO 7005, JIS, JPI, welding ends on request
Designs	Angle-type, globe-type, z-type
Actuator	Pneumatic, electric, hydraulic
Number of stages (max.)	12
Number of controlled stages (max.)	8
Operating range (max.)	1:500

Features/benefits:

- Cavitation free
- Low noise
- Designed for extreme high pressure control
- Extremely robust
- Linearly modified characteristic curve
- Customized

THE QUALITY

We set the “bar” very hight when it comes to quality.

SCHROEDAHL meet the highest quality requirements in terms of material and machining. No matter where our valves are installed. The limiting ranges – resulting from the place of installation of our products – must meet the highest quality requirements in terms of material and machining.

Our sophisticated CNC machinery equipment enables high precise machining of corrosion-resistant duplex steels and high-quality titanium alloys. State-of-the-art equipment, 3D-CAD engineering, which is supported by our CAM system, leaves nothing to chance.

Our equipment enables us to exceed set standards – worldwide.

Seat-leakage, pressure, and flow rates of all SCHROEDAHL valves are tested on our own testing stations. Only perfectly manufactured valves leave our company. Our products are most durable. Therefore, we make sure that we can manufacture any spare part you might require – even after decades.

We constantly share our know-how, and we instruct pump manufacturers, plant designers, operators as well as service and maintenance personnel – worldwide.

We have all common certifications such as ISO 9001, ISO 14001 and others, as well as special certifications such as KTA1401.

THE WORLD LEADER

SCHROEDAHL is an independent, constantly expanding business.

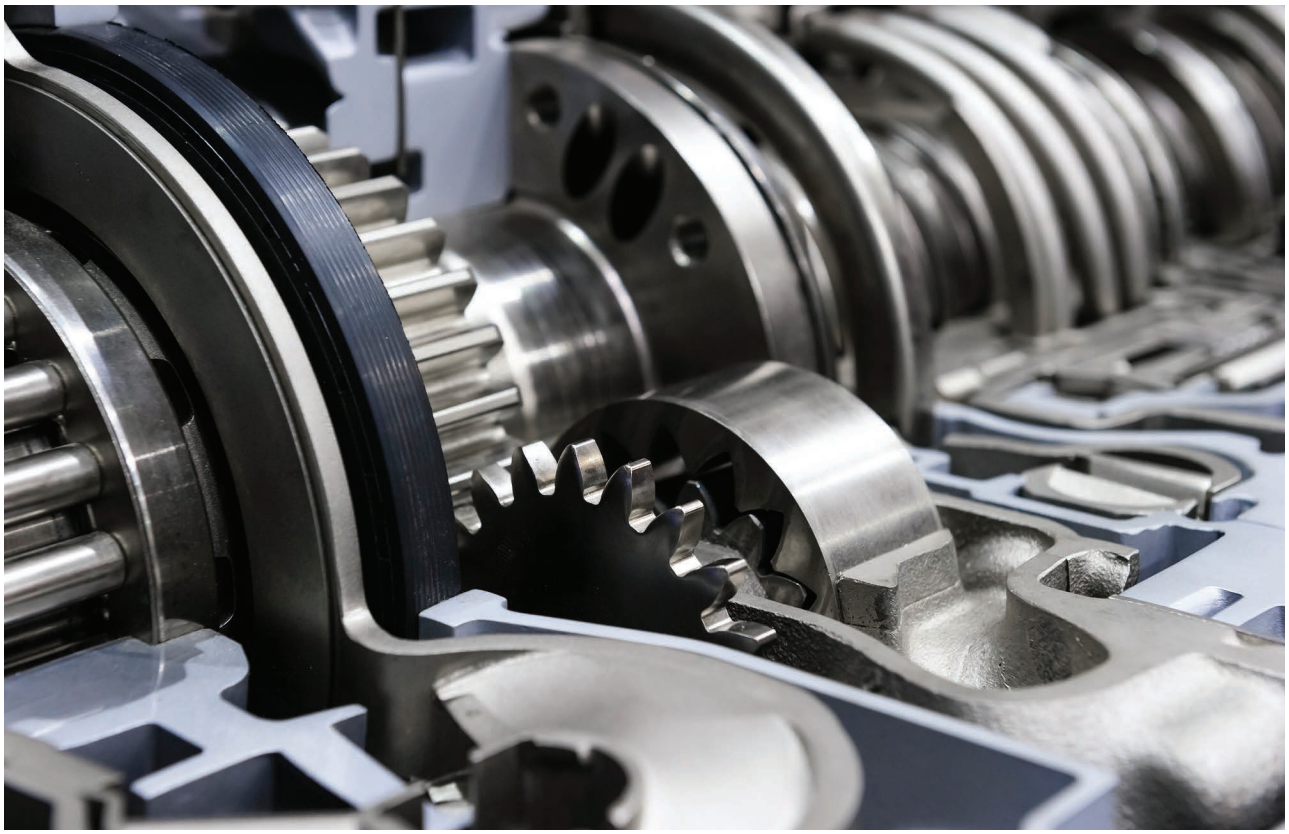

Swift decision-making processes enable us to act and react in a fast and flexible manner.

Consistent development and adherence to the highest safety standards makes us the world leader in the segment of automatic pump protection valves.

We feel comfortable in the “high pressure zone”. 640 bar applications belong to our daily business.

No matter what global requirements arise in the field of processing and power plants – we are prepared to continuously expand the boundaries of what is technically possible.

Also the energy market is changing faster and faster. Nature, politics and the planet’s resources are forcing us to find new solutions.

We are already a step ahead - in our flow laboratory our R&D Department is constantly researching and developing new advanced solutions for you and for the future of your business.

THE PEOPLE

Made in Germany! Proven top quality can be only achieved through bast training and high motivation.

Our ingenious and innovative staff have their share of the company's success.

Exceptional solutions and the production of approximately 3000 – 4000 customized pump protection valves per year are only possible thanks to the skills and enthusiasm of our staff.

We are the talent factor in the business of flow and pressure.Our company is also continuously expanding.

Necessary capacities are created in a targeted oriented manner – we adapt to the specific market and production capacity requirements.

WHY US?

WHETHER 10 OR 640 BAR

WHETHER WATER, OIL OR GAS

HIGHEST COMPETENCE – HIGHEST QUALITY

MOST FLEXIBLE PRODUCTION AND
SOLUTIONS BEYOND STANDARDS

SCHROEDAHL – WE PROTECT YOUR BUSINESS.

CIRCOR is a market-leading, global provider of integrated flow control solutions, specializing in the manufacture of highly engineered valves, instrumentation, pumps, pipeline products and services, and associated products, for critical and severe service applications in the oil and gas, power generation, industrial, process, maritime, aerospace, and defense industries.

Excellence in Flow Control

Asia | Europe | Middle East | North America

CIRCOR | SCHROEDAHL®

SCHROEDAHL GmbH
Alte Schönenbacher Str. 4
51580 Reichshof-Mittelagger
Germany
Telefon: +49 2265 9927-0
Telefax: +49 2265 9927-947
schroedahl@circor.com
www.schroedahl.com

CIRCOR

ALLWEILER® | IMO® | IMO AB® | HOUTTUIN™ | TUSHACO® | WARREN® | ZENITH® | RTK® | SCHROEDAHL® | HALE HAMILTON®

circor.com

CIRCOR, SCHROEDAHL is registered trademark of CIRCOR International or its subsidiaries in the U.S. and/or other countries. ©2022, CIRCOR International. All rights reserved. SCH-NEW-BEOCHURE-EN-IND-0209-09/2022